emuca
where creation begins

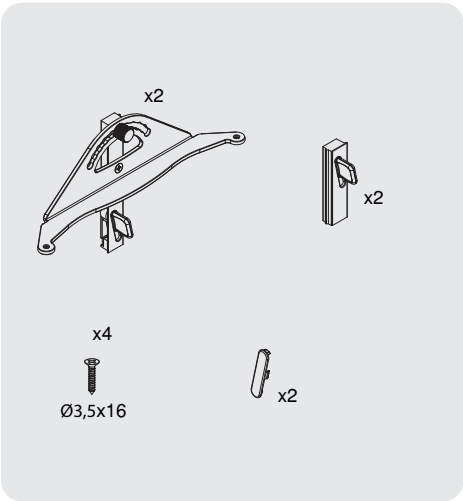

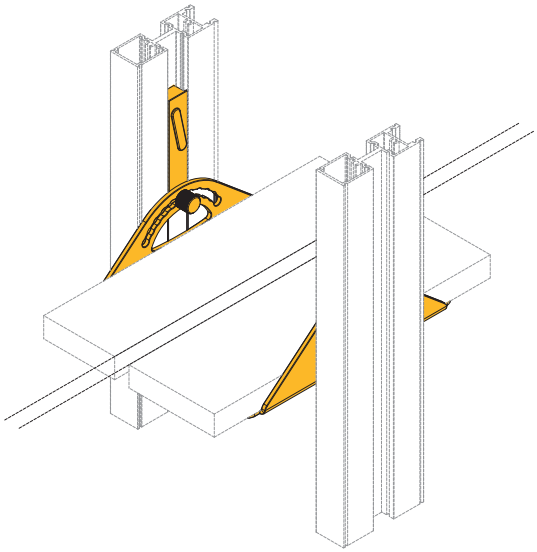

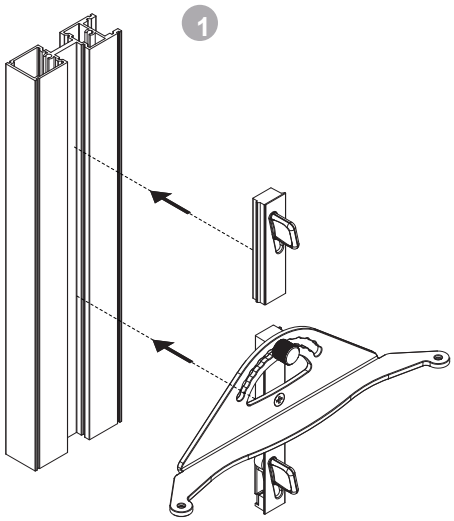

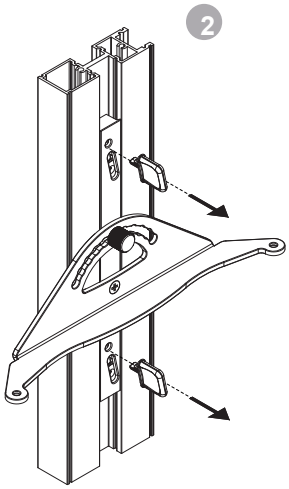

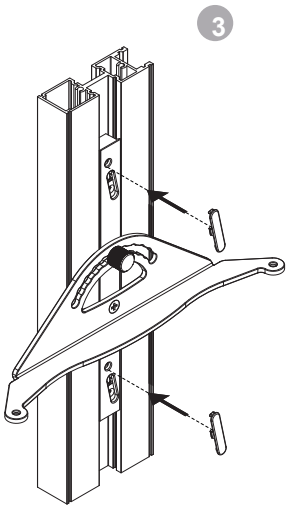

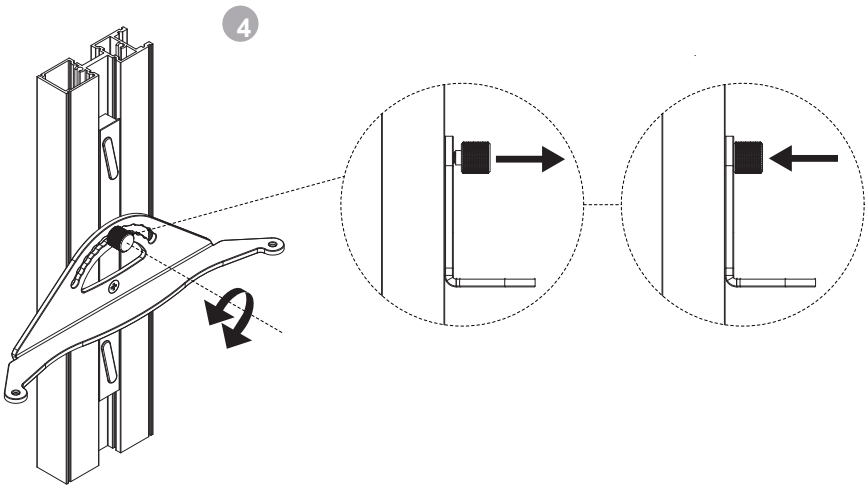
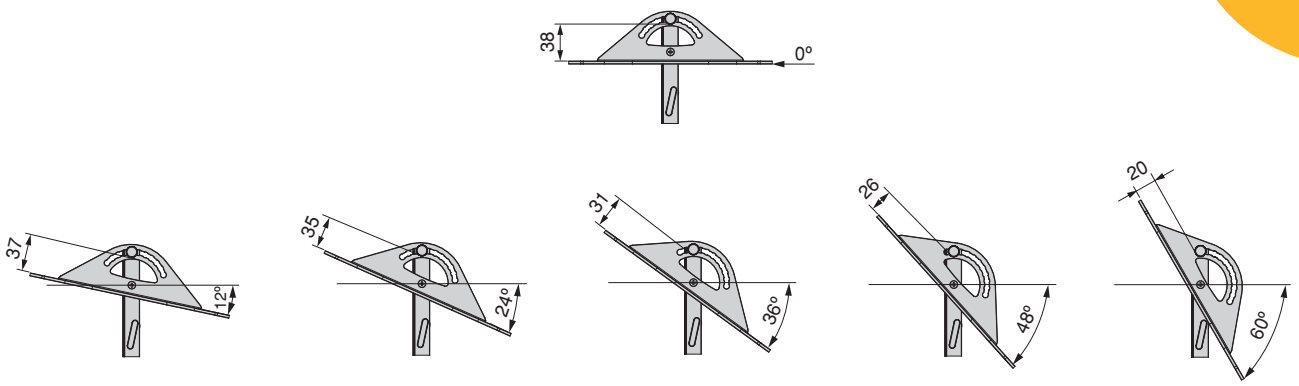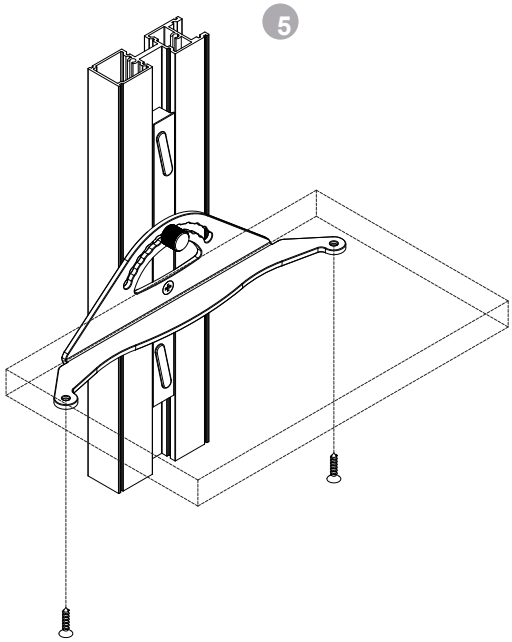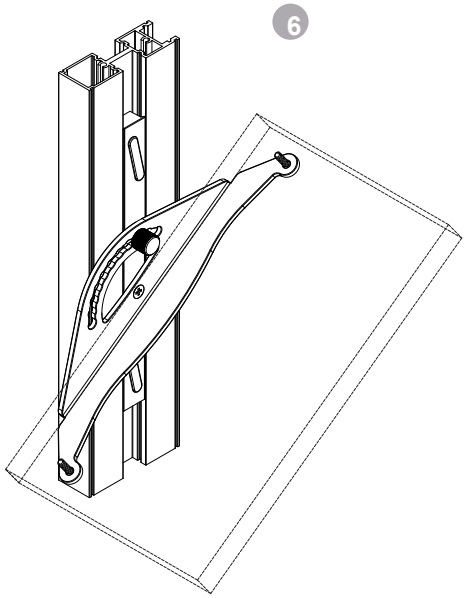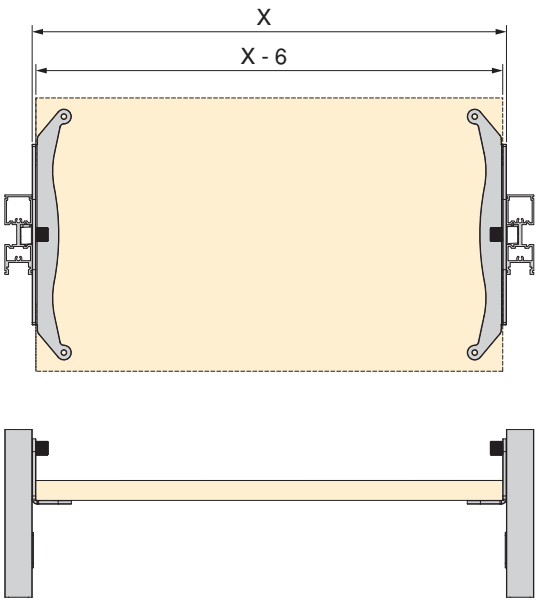
emuca
where creation begins