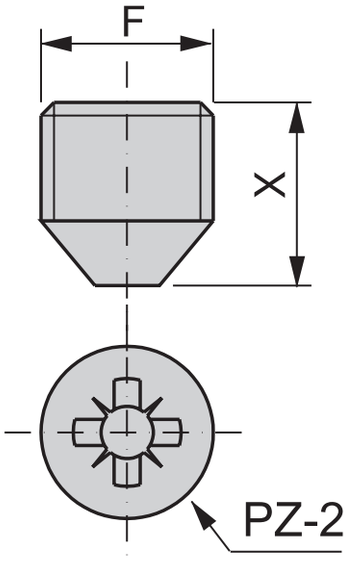
F
X
PZ-2