emuca
furniture fittings solutions

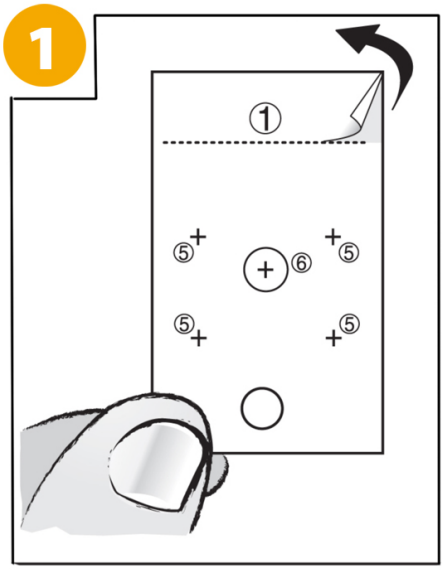

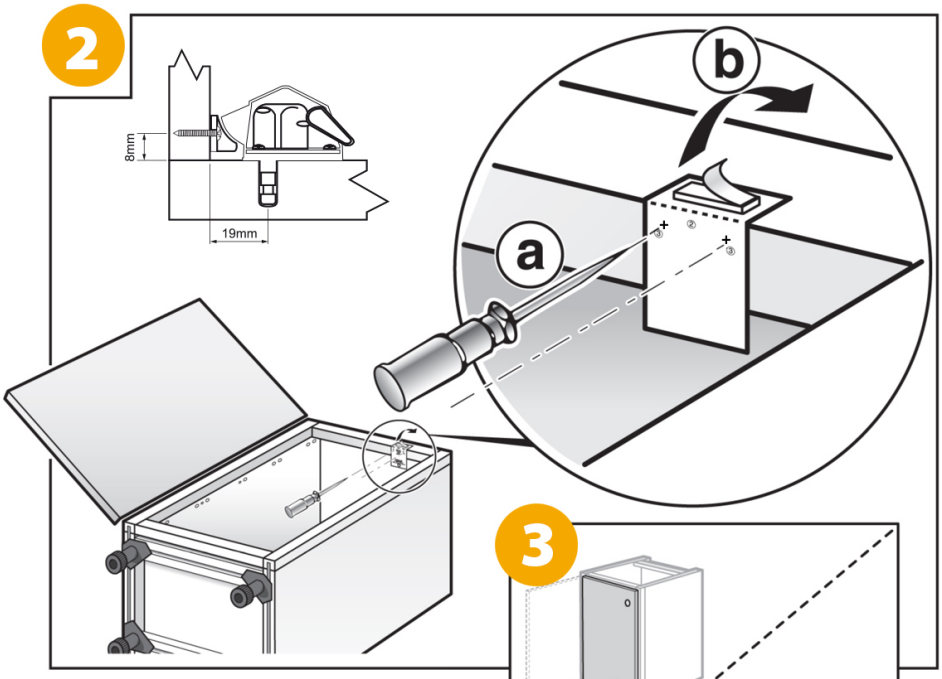

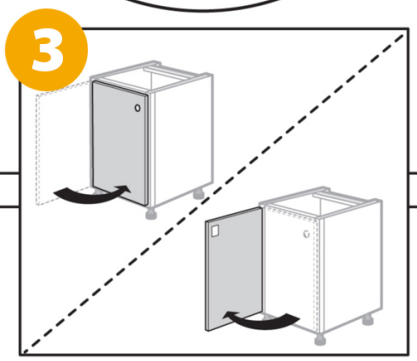

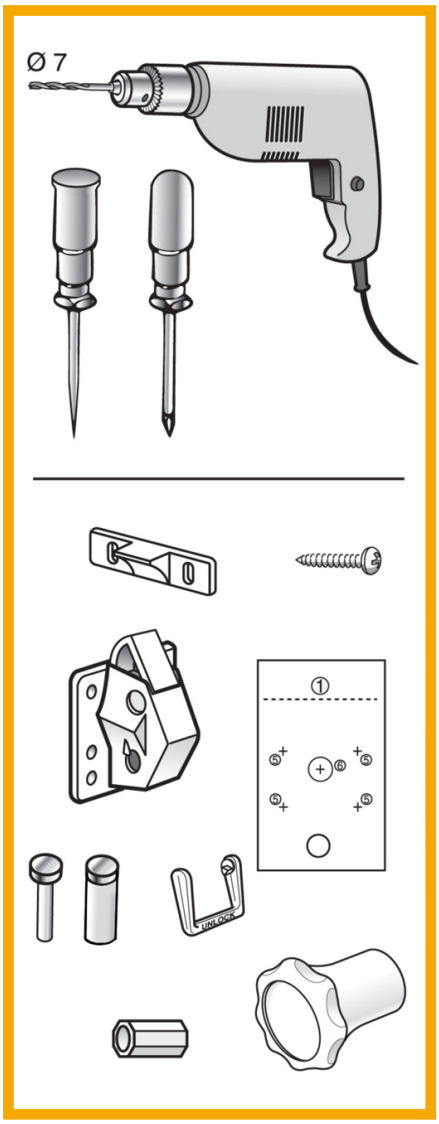

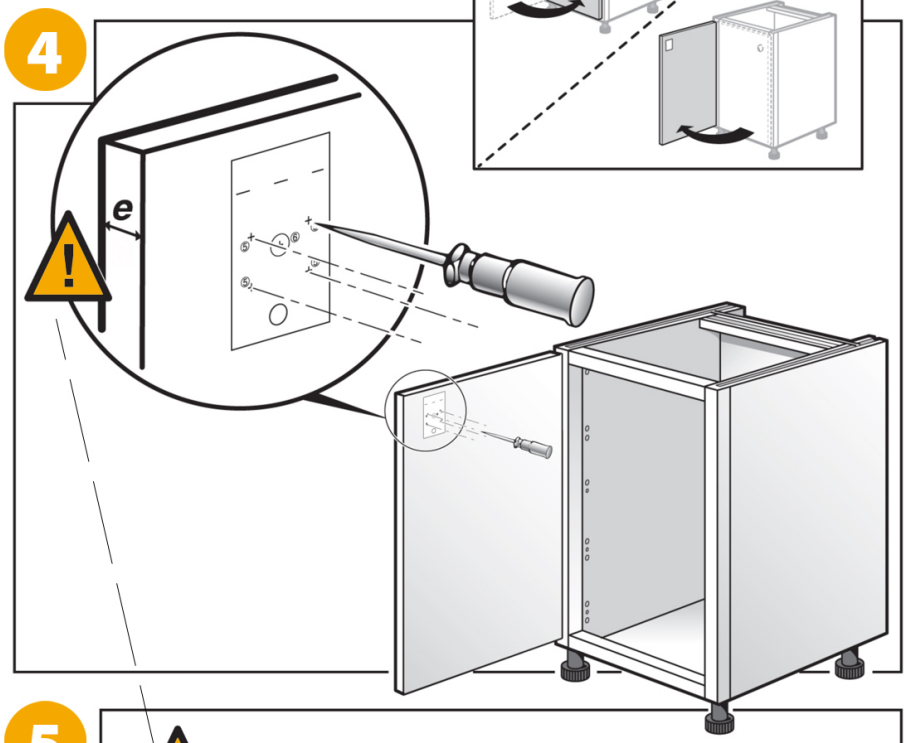

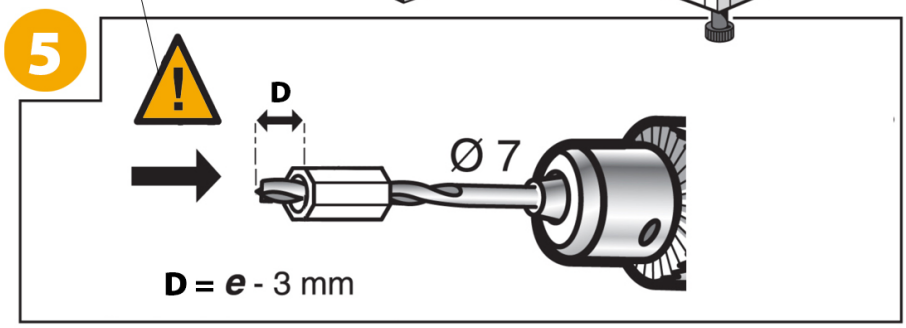

emuca
furniture fittings solutions

6

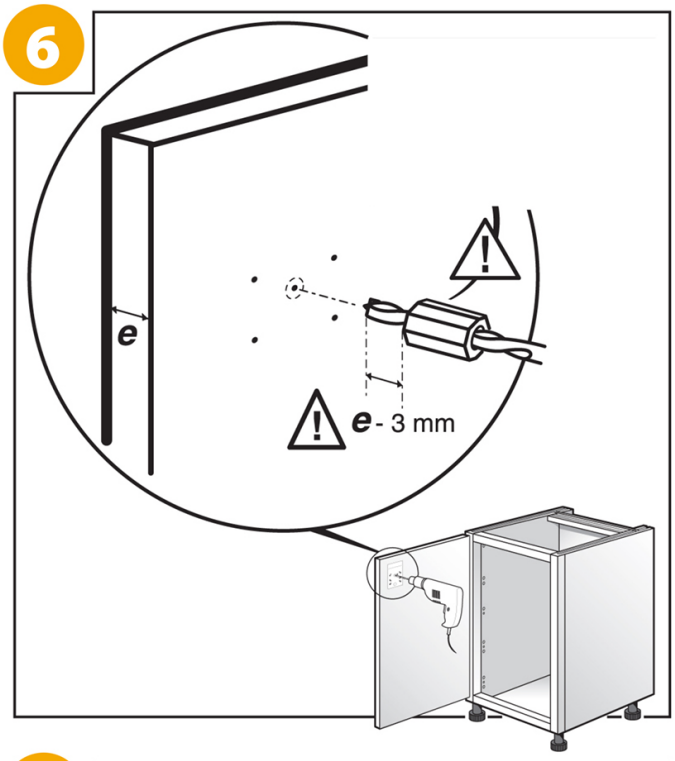

7

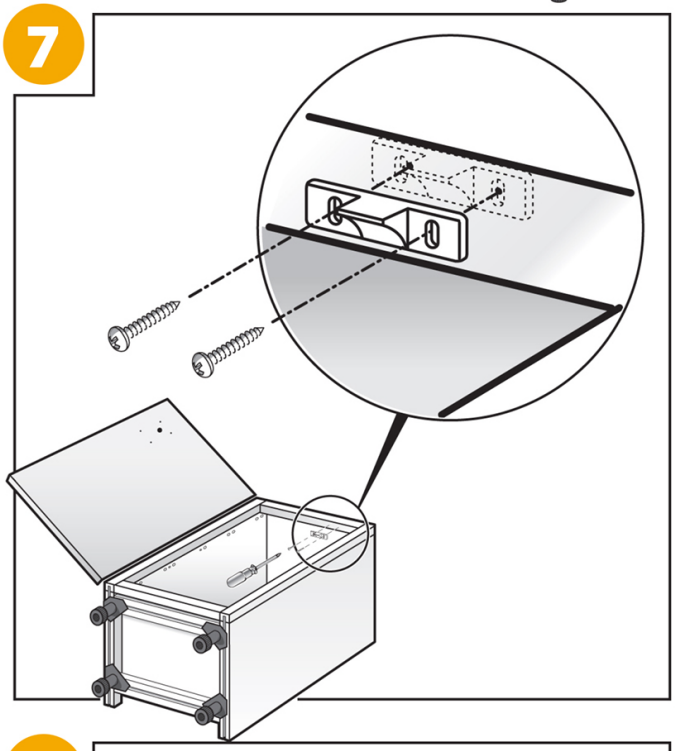

8

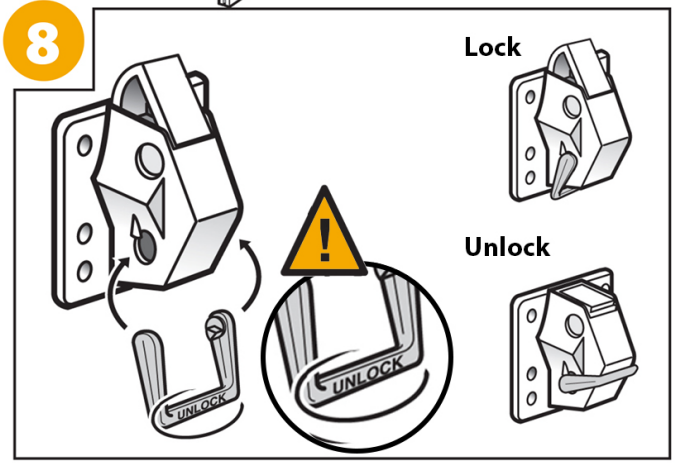

9

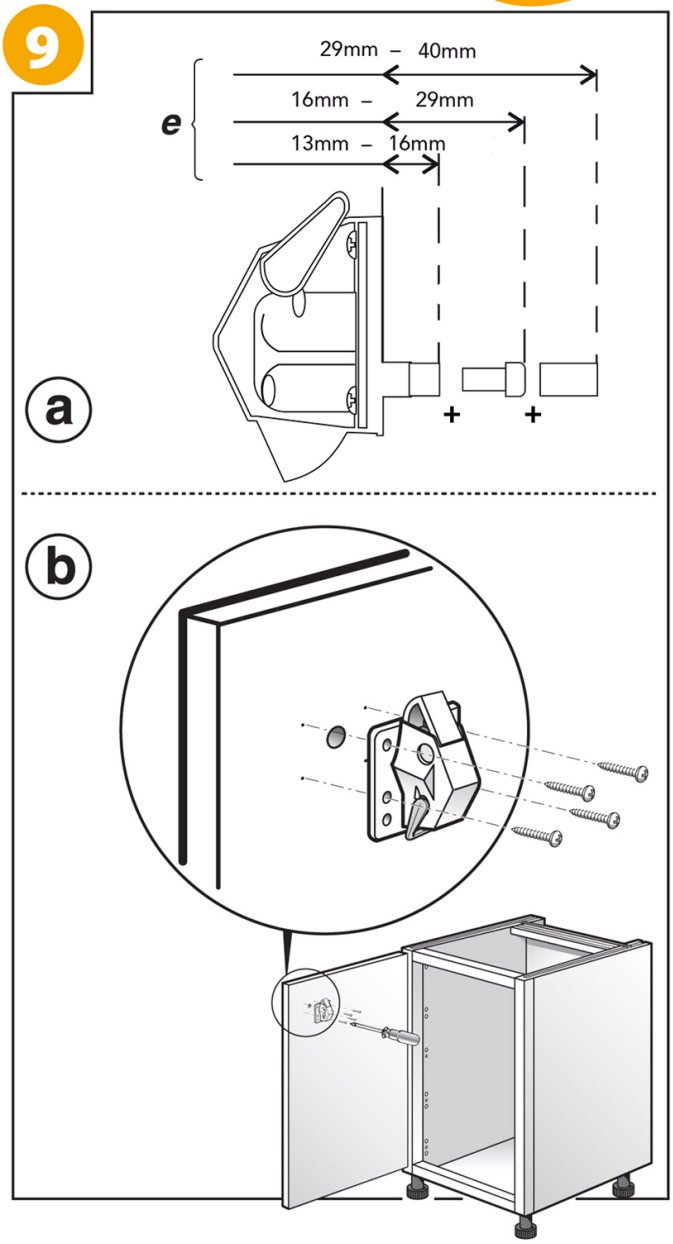
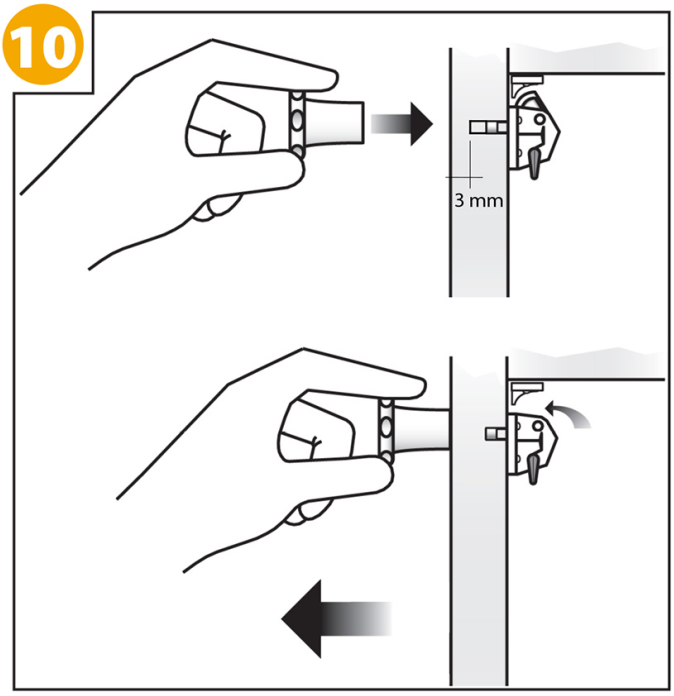
10