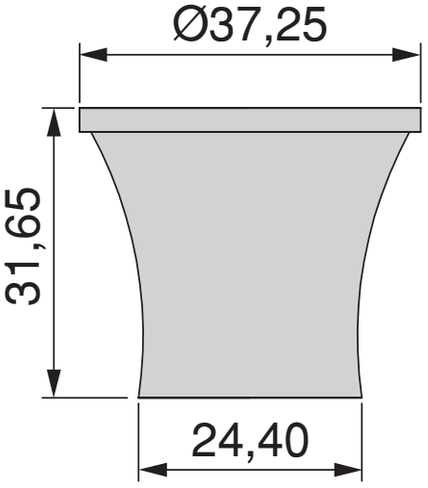
Ø37,25
31,65
24,40